MH-10694, MH-510694
Forbidden City Asian Console Table

design TOSCANO®

INSTRUCTIONS FOR YOUR PRODUCT

Thank you for your recent purchase of this Design Toscano hand-crafted piece of furniture art. We have taken great care to create this piece especially for you. Please review these instructions and assemble this piece with care. Do not over tighten any screw or bolt connection.

Parts

A (8 PCS) B (8 PCS) C (8 PCS)

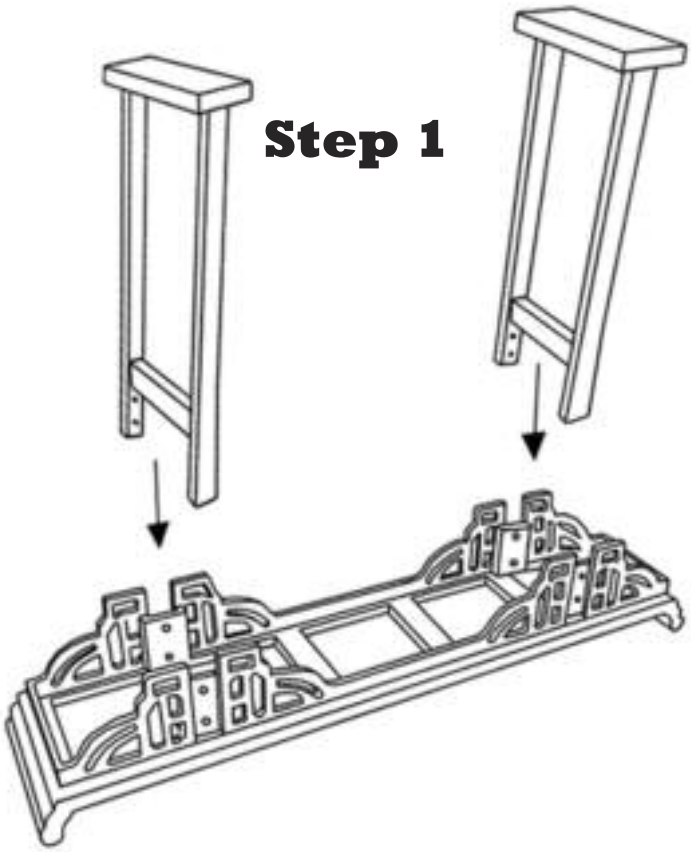

Step 2

Repeat 8 times, two for each leg.

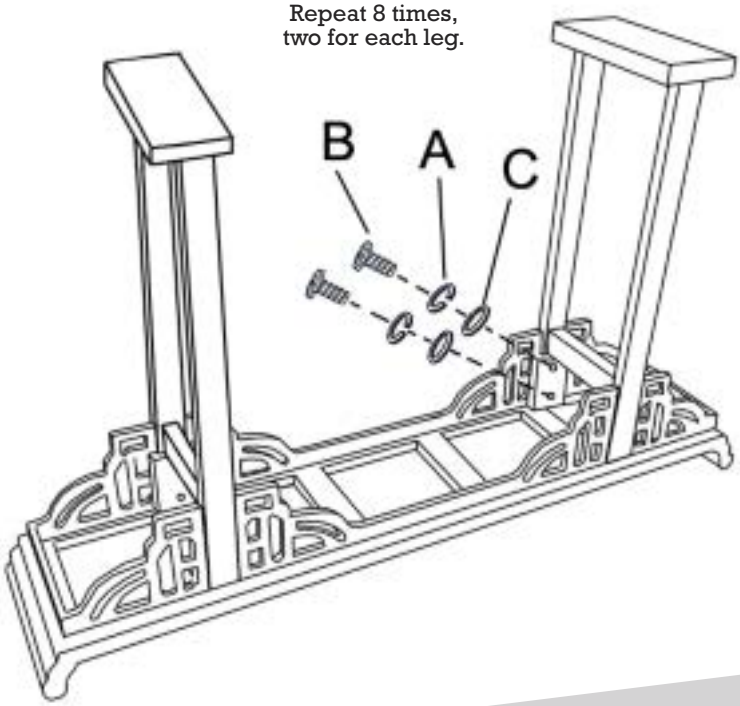

©Copyright 2021, Design Toscano, Inc.

1.800.525.0733
DESIGNTOSCANO.COM

THANK YOU FOR YOUR PURCHASE